Two-Way high-pressure ball valves in carbon steel

FT 221/1

Two-way ball valves for high pressure up to 500 Bar (depending on the size) available in sizes from 1/4" to 2"

High pressure ball valves
Two-way
Carbon steel



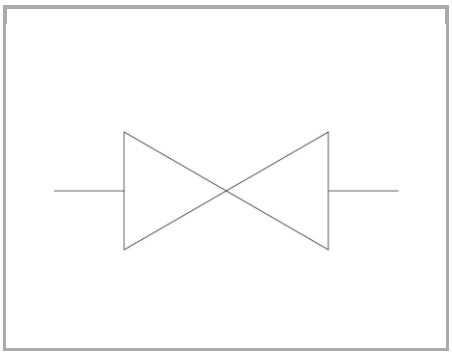

Technical information

Technical description

Used to obtain a quick flow shut-off, avoiding noticeable pressure drop, the FT 221/1 ball valves are designed to obtain perfect sealing, easy and quick operation under high pressure conditions. Working pressure up to 500 bar and with every kind of fluids, such as: hydraulic oil, fuel, emulsions and liquids in general.

Materials

CORPO / BODY	Acciaio al carbonio / Carbon Steel
STELO DI COMANDO / CONTROL STEM	Acciaio cromato / Chrome-plated steel
SFERA / BALL	Acciaio cromato / Chrome-plated steel
GUARNIZIONE STELO / STEM GASKET	Di serie NBR - A richiesta FPM/Standard NBR-on demand FPM
GUARNIZIONE SFERA / BALL GASKET	PTFE

Technical data

TIPO / TYPE	PRESSIONE ESERCIZIO BAR / WORKING PRESSURE BAR	TEMPERATURA ESERCIZIO / WORKING TEMPERATURE	GRADO DI FILTRAZIONE µm / FILTRATION GRADE µm
18	500	-20°C/+100°C	25
14	500	-20°C/+100°C	25
38	500	-20°C/+100°C	25
12	500	-20°C/+100°C	25
34	320	-20°C/+100°C	25
100	320	-20°C/+100°C	25
114	320	-20°C/+100°C	25
112	320	-20°C/+100°C	25
200	320	-20°C/+100°C	25

Dimensional tables and drawings

TIPO / TYPE	DN	ØA	B	ØC	D	E	F	G	H
18	4	1/8"G	14	5	71	44,5	8	27	37
14	6	1/4"G	14	6	71	44,5	8	27	37
38	10	3/8"G	14	10	72	50	8	34	43
12	13	1/2"G	16	13	85	51	8	36	48
34	20	3/4"G	18	20	97	71,5	11	50	63
100	25	1"G	20	24	113	76	11	60	67
114	32	1 1/4"G	22	32	110	106	20	78	80
112	38	1 1/2"G	24	38	130	112,5	15	83	85
200	48	2"G	28	48	140	132	20	100	100

TIPO / TYPE	L	M	N	P (A RICHIESTA / ON REQUEST)	Q (A RICHIESTA / ON REQUEST)	ØR (A RICHIESTA / ON REQUEST)	CH	PESOKg
18	34	13	115	29	29	4,5	9	0,300
14	34	13	115	29	29	4,5	9	0,374
38	40	16,5	115	35	35	5,5	9	0,559
12	41	17	115	39	35,5	6,5	9	0,655
34	57	24	160	50	49,5	6,5	14	1,564
100	60	26,5	160	54	54	6,5	14	2,082
114	85	35	200	-	-	-	17	2,107
112	92	41,5	200	-	-	-	17	3,698
200	111	50	200	-	-	-	19	6,070

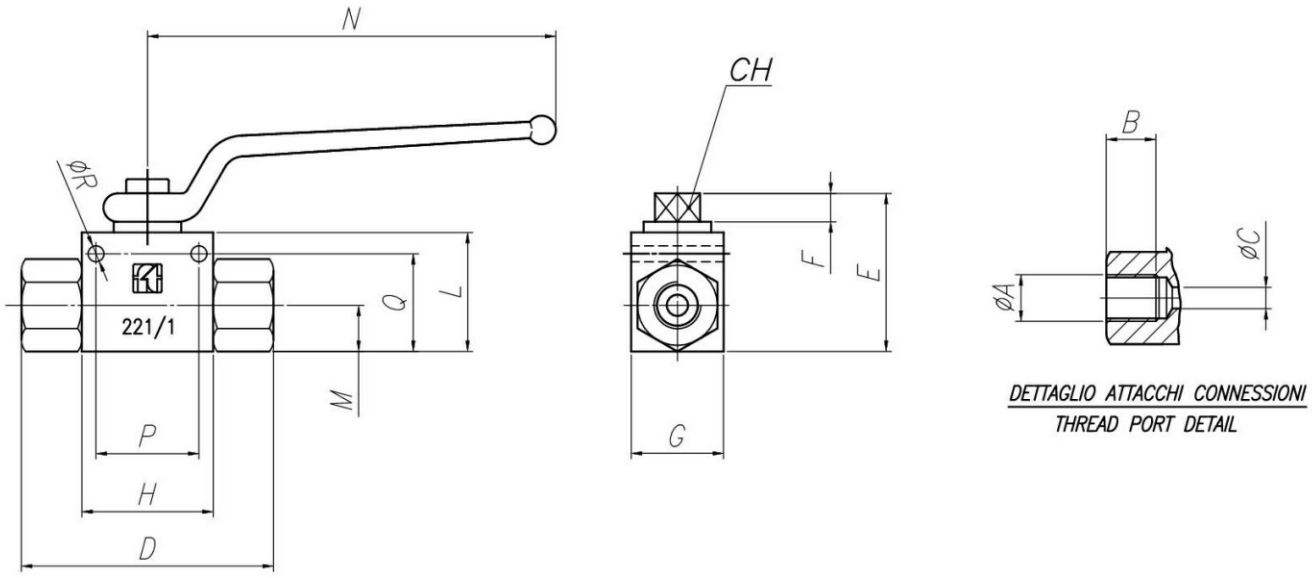

DETTAGLIO ATTACCHI CONNESSIONI
THREAD PORT DETAIL